Ledvance | PAR16 | Dimmable | LED Lamp | GU10 | 575lm | CRI97 | 2700K

LED-4099854456732 / ITM003246



Datasheet

Ledvance | PAR16 | Dimmable | LED Lamp | GU10 | 575lm | CRI97 | 2700K



Bulb Cap	CRI	Material	Warranty
GU10	>97	Glass	5 Years

SKU: LED-4099854456732
ITM: ITM003246

Key Features:

- **Light Colour:** Warm White
- **Equivalent Wattage:** 80W

Mechanical Data			
Base Type:	GU10	**Diffuser Material:**	Glass
Product Weight:	40g	**Product Height:**	52mm
Product Length:	52mm	**Product Diameter:**	50mm

Electrical Data			
Equivalent Wattage:	80W	**Wattage:**	6W

Input Data			
Input Frequency:	50Hz - 60Hz	**Input Voltage:**	220V - 240V
Power Factor:	1A		

Control Data			
Dimmable:	Yes	**Dimming Type:**	TRIAC

Photometric Data

Beam Angle:	36°	**CCT:**	2700K
CRI:	97	**Diffuser Colour:**	Clear
Diffuser Finish:	Clear	**Light Colour:**	Warm White
Lumen Total:	575Lm	**Lumens Per Watt:**	69Lm/W
Lumens Per Watt (White 2):	69Lm/W	**Lumens Per Watt (White):**	69Lm/W
Luminous Intensity:	900cd	**Peak Luminous Intensity:**	900cd
Bulb Colour:	Warm White		

Environmental Data

Body Material:	Glass

Efficiency Data

Energy Efficiency Class:	E	**Lumen Maintenance Factor:**	1
Rated Life:	40000 Hours	**Startup Time:**	1 Secs
Switch Cycles:	100000		

Dimension Drawing

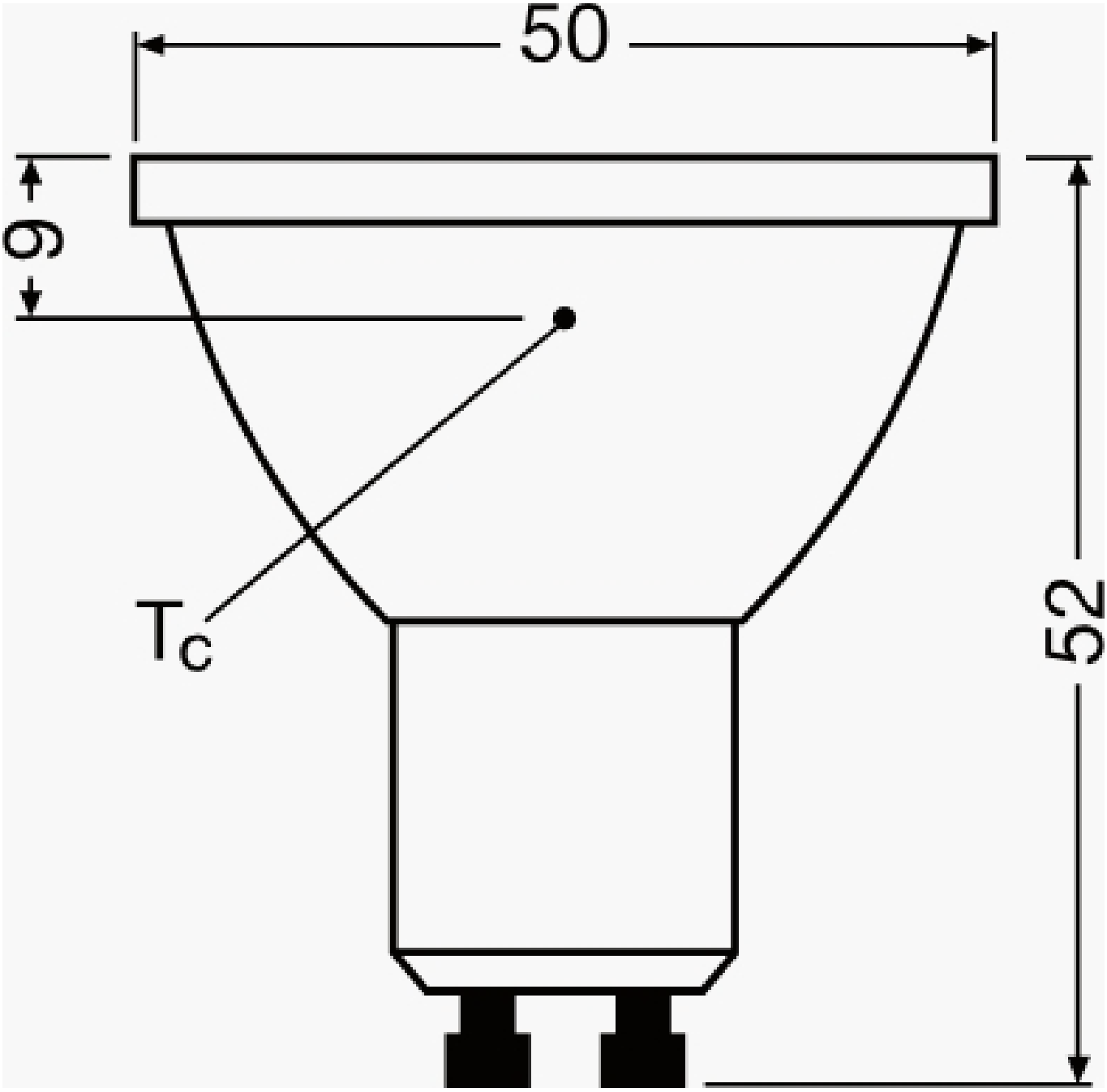

Disclaimer

Tagra Lighting have taken reasonable care to ensure that the information in this datasheet is accurate at time of publication however it should be noted that all specifications are subject to tolerance. Descriptive specifications such as colour are subjective. Tagra Lighting reserve the right to update specifications without notice. The information in the datasheet may only be relied on by customers of Tagra Lighting in accordance with applicable terms and conditions.

Tagra Lighting is a trading name of T.R Ventures Limited, a company incorporated in England with registered number 07757720. Our registered office is Unit 2, Southfield Industrial Estate, Trafford Park, M17 1SJ.

www.tagra-lighting.co.uk

